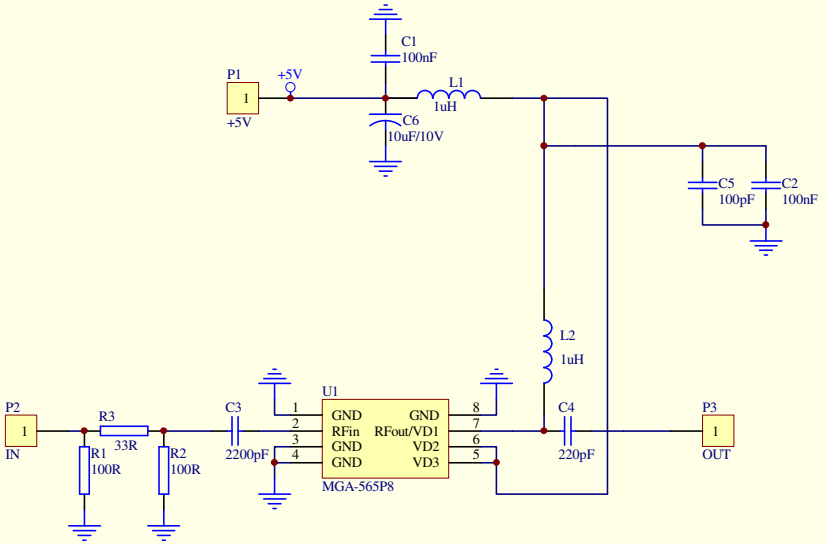

Title AMP_BUF		
Size A4	Number	Revision
Date: 7-Nov-2004	Sheet of	
File: D:\Documents and Settings\sj\Pulpit\trans\WERSJA AKTUALNY IF_NEW_TECHNO\IF_NEW_TECHNO.ddb		