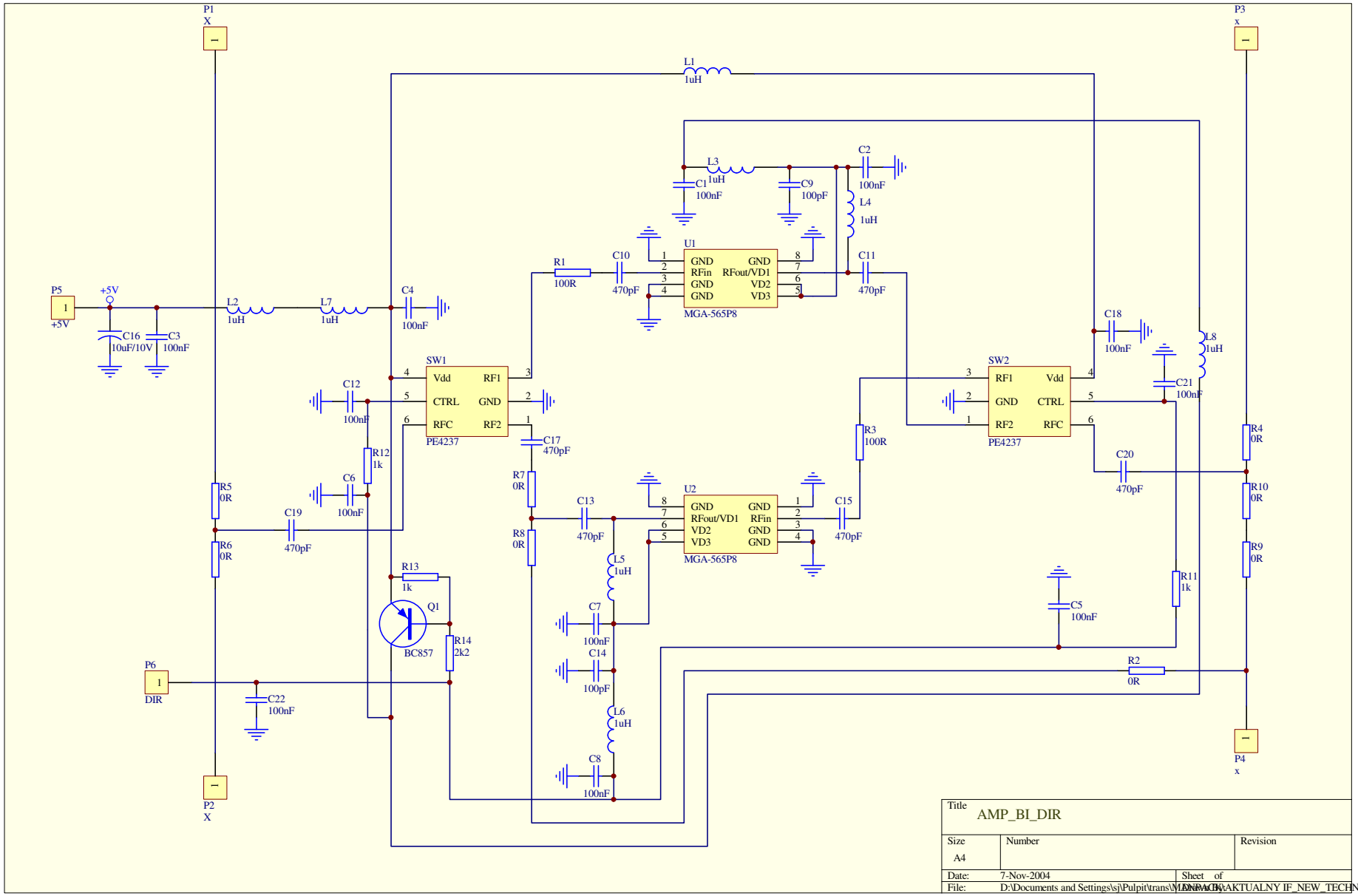
P1
X
P3
x
L1
1uH
L3
1uH
C1
100nF
C9
100pF
C2
100nF
L4
1uH
U1
GND
RFin
GND
GND
GND
RFout/VD1
VD2
VD3
MGA-565P8
R1
100R
C10
470pF
C11
470pF
P5
+5V
+5V
C16
10uF/10V
C3
100nF
L2
1uH
L7
1uH
C4
100nF
SW1
Vdd
CTRL
RFC
RF1
GND
RF2
PE4237
C12
100nF
R12
1k
C6
100nF
C17
470pF
R7
0R
R8
0R
C13
470pF
U2
GND
RFout/VD1
VD2
VD3
GND
RFin
GND
GND
MGA-565P8
C15
470pF
R3
100R
SW2
RF1
GND
RF2
Vdd
CTRL
RFC
PE4237
C18
100nF
L8
1uH
C21
100nF
C20
470pF
R4
0R
R10
0R
R9
0R
R11
1k
C5
100nF
R5
0R
R6
0R
C19
470pF
R13
1k
Q1
BC857
R14
2k2
L5
1uH
C7
100nF
C14
100pF
L6
1uH
C8
100nF
P6
DIR
C22
100nF
R2
0R
P2
X
P4
x
Title
AMP_BI_DIR
Size
A4
Number
Revision
Date:
7-Nov-2004
Sheet of
File:
D:\Documents and Settings\sj\Pulpit\trans\WERSJA AKTUALNY IF_NEW_TECHNO\IF_NEW_TECHNO.ddb